A Two Dimensional Version of the Goldschmidt-Sims Conjecture.

Yair Glasner
Institute of Mathematics, The Hebrew University
Jerusalem 91904, Israel

Abstract

The Goldschmidt-Sims conjecture asserts that there is a finite number of (conjugacy classes of) edge transitive lattices in the automorphism group of a regular tree with prime valence. We prove a similar theorem for irreducible lattices, transitive on the 2-cells of the product of two regular trees of prime valences.

1 Introduction

An *amalgam* is a configuration of three groups A, B, C with monomorphisms $\phi_A : C \hookrightarrow A$ and $\phi_B : C \hookrightarrow B$. An amalgam is called *effective* if every subgroup $N < C$ which is normal in both A and B is the trivial subgroup. An amalgam is *locally primitive* if C is a maximal subgroup in both A and B. Two amalgams are said to be *isomorphic* if there are group isomorphisms $\psi_A : A \to A'$,$\psi_B : B \to B'$,$\psi_C : C \to C'$ making the obvious diagram commutative.

Conjecture 1.1. (Goldschmidt-Sims)
Given two natural numbers $p, q \in \mathbb{N}$ there is only a finite number of (isomorphism classes of) effective locally primitive amalgams of finite groups $A \hookleftarrow C \hookrightarrow B$, such that $[A : C] = p$ and $[B : C] = q$.

Remarks:

- If p, q are prime then any amalgam is automatically locally primitive. Thus the Goldschmidt-Sims conjecture for "prime amalgams" asserts that there is only a finite number of effective amalgams.
- The local primitivity assumption is essential, examples of infinite families of effective amalgams are given in [BK90].
- David Goldschmidt proved the conjecture for the special case where $p = q = 3$, in fact, he completely classifies all effective amalgams in this case (see [Gol80] and [DGS85]).
- Extending the work of Goldschmidt Paul Fan ([Fan86a]) proves the conjecture in the case where p, q are both prime but after introducing a further restriction on the family of amalgams, namely that C be an l-group for some prime l.

The Goldschmidt-Sims conjecture has a geometric interpretation in terms of Bass-Serre theory of group actions on trees. As in [Ser80], amalgams of index (p, q) stand in one to one correspondence with groups acting transitively and without inversion on the edges of the (p, q)-bi-regular tree. Effective amalgams correspond to effective actions. The locally primitive amalgams are these which give rise to locally primitive actions. A group action on a tree $\Gamma \rightsquigarrow T$ is called *locally primitive* if for every vertex x of T the action $\Gamma_x \rightsquigarrow Lk(x)$ of the vertex stabilizer on its neighbors is a primitive group action.

If the tree T is locally finite the group $\mathrm{Aut}(T)$ is a locally compact group and therefore admits a Haar measure. It makes sense in this context to talk about lattices and cocompact lattices in $\mathrm{Aut}(T)$. Below is a second statement of the Goldschmidt-Sims conjecture using tree theoretic terminology.

Conjecture 1.2. (Goldschmidt-Sims)
Let $p, q \in \mathbb{N}$ be two natural numbers, $T = T^{p,q}$ the p, q bi-regular tree. Then, up to conjugacy in $\mathrm{Aut}(T)$, there is only a finite number of locally primitive lattices $\Gamma < \mathrm{Aut}(T)$ such that the quotient $X \stackrel{\text{def}}{=} \Gamma \backslash T$ is an edge.

Remarks:

- The effectiveness assumption is implicit here, every $\Gamma < \mathrm{Aut}(T)$ acts effectively on T so the amalgam associated with the action of Γ on T is automatically effective.
- The assumption about local primitivity is redundant if p, q are prime.
- The assumption that Γ acts with an edge as a quotient is redundent. In fact a loclly primitive action is, in particular, localy transitive. This means that Γ acts transitivly on the edges and, if it contains an inversion, it will also act transitivly on the directed edges. In the second case there is an index two subgroup that acts with an edge as a quotient.

Let T^1 and T^2 be two (bi-)regular trees, thinking of the trees T^i as simplicial complexes, we can construct their product which is a two dimensional square complex $\Delta = T^1 \times T^2$. It is not difficult to check that if the two trees T^1 and T^2 are not isomorphic then $\mathrm{Aut}(\Delta) = \mathrm{Aut}(T^1) \times \mathrm{Aut}(T^2)$. If $T^1 \cong T^2$ then $\mathrm{Aut}(T^1) \times \mathrm{Aut}(T^2)$ is an index two subgroup of $\mathrm{Aut}(\Delta)$. We will always ignore the automorphism that "flips" the two trees and even if the trees happen to be isomorphic we will assume, by abuse of notation, that $\mathrm{Aut}(\Delta) = \mathrm{Aut}(T^1) \times \mathrm{Aut}(T^2)$.

In ([BM00b] and [BMZ]) Burger, Mozes and Zimmer develop a theory of uniform lattices in $Aut(\Delta)$. This theory is an analogue of the theory of irreducible lattices in higher rank semisimple Lie groups. The first definition needed is that of an irreducible lattice:

Definition 1.3. (Burger-Mozes, [BM00b]) *A lattice $\Gamma < \mathrm{Aut}(\Delta)$ is called* **irreducible** *if it has non-discrete projections on $\mathrm{Aut}(T^i)$ for $i \in \{1, 2\}$.*

If a lattice in the product of two simple Lie groups is irreducible (in the sense that its projections are not discrete) then, in fact, it already has dense projections. In our setting the assumption of non discrete projections does not have such strong implications. Consequently, the definition given above is usually not enough, in fact for most of the theorems proved in [BM00b] and [BMZ] it is necessary to explicitly assume that lattices have "large projections" in some sense. Specifically many theorems are proved for lattices which are irreducible and admit locally primitive projections on both trees.

The motivation for this work is to treat the analogue of the Goldschmidt-Sims conjecture in the "higher rank" setting of a product of trees. We prove the following:

Theorem 1.4. *Let $\Delta = T^1 \times T^2$ be the product of two regular trees of prime valences. Then there is a finite number of conjugacy classes in* $\mathrm{Aut}(\Delta)$ *of irreducible lattices* $\Gamma < \mathrm{Aut}(\Delta)$ *such that* $X \stackrel{\text{def}}{=} \Gamma\backslash\Delta$ *is a square.*

This theorem is proved in section (2).

The analogy between the theory of rank-1 Lie groups and the automorphism groups of locally finite regular trees was always a major guideline towards the development of the later theory. Within this analogy the Goldschmidt-Sims conjecture can be viewed as a tree theoretic analogue to the works of Kazhdan-Margulis (see [KM68] and [Rag72]). Kazhdan and Margulis prove the existence of a positive lower bound on the co-volume of lattices in connected semisimple Lie groups without compact factors. Unlike the Lie group case there is no global lower bound on the co-volume of lattices in the automorphism group of a regular tree. Many examples involving families of lattices with co-volumes tending to zero are given in [BK90]. The Goldschmidt-Sims conjecture is equivalent to the existence of a positive lower bound on the co-volume of locally primitive lattices in $Aut(T)$. In the higher rank setting we suggest the following conjecture.

Conjecture 1.5. *There is a positive lower bound on the co-volume of irreducible lattices with locally primitive projections in* $\mathrm{Aut}(T^1) \times \mathrm{Aut}(T^2)$.

Theorem (1.4) proves the conjecture for a restricted family of lattices satisfying $\Gamma\backslash\Delta$ is a square and when the trees are of prime valence. It is natural to seek a generalization to theorem (1.4) by letting $X \stackrel{\text{def}}{=} \Gamma\backslash\Delta$ be a more general square complex. We focus on two properties of lattices $\Gamma < \mathrm{Aut}(\Delta)$, both properties depend only on the quotient space $X = \Gamma\backslash\Delta$ and both hold when X is a square:

- Call Γ or X *locally a product* if any of the following equivalent properties holds (the equivalence is easy and we leave it to the reader).
  - X is covered[1] by a product of two (not necessarily regular) trees $\tilde{X} = Y_1 \times Y_2$.
  - For every vertex v of X the link $Lk_X(v)$ is a complete bi-partite graph [2].
  - For every vertex v of Δ and a pair of horizontal and vertical edges a, b with $t(a) = t(b) = v$, the group Γ_v decomposes as a product $\Gamma_v = \Gamma_a\Gamma_b$
- The property of Γ acting locally transitively on T^i can be recognized by looking at the complex X. Explicitly let $X^{(1)}$ be the one-skeleton of X and write $X^{(1)} = X^{(1),i} \cup X^{(1),3-i}$ as a union, where $X^{(1),1}$ is the *horizontal one-skeleton* of X and $X^{(1),2}$ is the *vertical one-skeleton.* Γ acts locally transitively on T^i if and only if for every connected component W of $X^{(1),3-i}$ and for every small open neighborhood $W \subset U \subset X$ the set $U\backslash W$ is connected. If this holds we say that X *is locally connected in the i-direction.*

Remark: In contrast, the property of acting locally primitively, is dependent on the actual group and not only on the quotient complex. This is evident even in the one dimensional case. For example the two amalgams $\mathbb{Z}/4\mathbb{Z} * \mathbb{Z}/4\mathbb{Z}$ and $S^4 *_{S^3} S^4$ both admit the same universal cover but the second one is locally primitive whereas the first one is not.

[1] Note that we are talking about a covering of X as a square complex and not as a complex of groups. The universal cover of $\Gamma(X)$ as a complex of groups will always be Δ.

[2] Again we are talking about the link of v in X as a graph. It is always possible to define $Lk_{\Gamma(X)}(v) = Lk_X(\tilde{v})$ (see [Hae91]). This later object will always be a complete bi-partite graph.

Theorem 1.6. *Let $\Delta = T^1 \times T^2$ be the product of two regular trees of prime valences, X a square complex which is locally a product and locally connected in both directions, then the family of conjugacy classes of irreducible lattices $\Gamma < Aut(\Delta)$ admitting X as the quotient space (i.e. $X = \Gamma\backslash\Delta$) is finite.*

To prove the theorem we show that most square complexes which are locally a product and connected in both directions are actually never realized as quotients of the form $X = \Gamma\backslash\Delta$. This is expressed by the following dichotomy:

Theorem 1.7. *Let $\Delta = T^1 \times T^2$ be the product of two regular trees, $\Gamma < \mathrm{Aut}(\Delta)$ an irreducible lattice with locally primitive projections acting without inversion on both trees and $X \stackrel{\text{def}}{=} \Gamma\backslash\Delta$ the quotient. Assume that $\tilde{X}$, the universal cover of X is again a product of two (not necessary regular) trees $\tilde{X} = Y^1 \times Y^2$. Then one of the following holds:*

1. *X is a square.*
2. *Γ is torsion free, in which case $\tilde{X} = \Delta$ and $\Gamma \cong \pi_1(X, \cdot)$.*

The proofs of theorems (1.6 and 1.7) are given in section (3).

This paper is part of the author's M.Sc. thesis submitted to the Hebrew University of Jerusalem in 1997. I warmly thank my advisor, Professor Shahar Mozes, who introduced me to this beautiful subject and was so generous with his help and time. I wish to thank Professor Marc Burger for many fruitful discussions. Finally I thank the fund in memory of Giora Yeshinsky for giving me the award in his honor for this work.

2 Lattices acting on $T^1 \times T^2$ with quotient - a square

2.1 Notation and some basic Lemmas

If T is a tree we denote by $\mathrm{Aut}(T)$ its automorphism group and by $\mathrm{Aut}^0(T)$ the subgroup of elements acting without inversion on the tree. If ξ is a vertex or an edge of T, denote by $B_T(\xi, n)$ the set of vertices of T at a distance at most n from ξ. If Γ acts on T and $\xi \in T$ is a vertex or an edge denote the stabilizer by $\Gamma_\xi \stackrel{\text{def}}{=} \mathrm{Stab}_\Gamma(\xi)$, $\Gamma_\xi(n)$ will denote the point stabilizer in Γ of $B_T(\xi, n)$.
Here is a (weak) version of the Thompson-Wielandt theorem. One may view this theorem as a tree theoretic analogue for the existence of a Zassenhaus neighborhood in the setting of semisimple Lie groups (see [Rag72]).

Theorem 2.1. (Thompson-Wielandt) Let T be a regular tree of valence q, $\Lambda < \mathrm{Aut}(T)$ a locally primitive lattice, ξ an edge of T. Then there exist a prime $l < q$ such that $\Lambda_\xi(2)$ is an l-group (note that $\Lambda_\xi(2)$ might be trivial).

Proof. See [BCN80, Fan86b] □

Lemma 2.2. (Burger-Mozes)
Let T be a regular tree, $G < \mathrm{Aut}^0(T)$ a locally primitive group acting without inversions and $N \triangleleft G$ a normal subgroup. Then N either acts freely on T or is co-compact. If N does not act freely there exists a vertex $v \in T$ for which the action $Stab_N(v) \rightsquigarrow Lk(v)$ is transitive.

Proof. See [BM00a, Lemma 1.4.2] □.

τ_2	η_2	τ_1
η_3	ξ	η_1
τ_3	η_4	τ_4

Figure 1: A square of groups

Lemma 2.3. *Let $\Delta = T^1 \times T^2$ be the product of two regular trees, $\Gamma < Aut^0(T^1) \times Aut^0(T^2)$ an irreducible lattice acting without inversion and in a locally primitive way on each factor, $\phi^i : \mathrm{Aut}(\Delta) \to \mathrm{Aut}(T^i)$ the projections, then $\ker \phi^i \cap \Gamma$ is torsion free. In other words, every torsion element of Γ acts effectively on both trees.*

Proof The action of Γ on Δ is, by assumption, effective so every element ($\neq id$) of Γ acting trivially on T^i acts non trivially on T^{3-i}. In other words $\ker \phi^i \cap \Gamma$ injects under ϕ^{3-i} into a normal subgroup of $\overline{\Gamma^{3-i}} \stackrel{\text{def}}{=} \overline{\phi^{3-i}(\Gamma)}$ (the closure of the projection of Γ). By assumption $\overline{\Gamma^{3-i}}$ acts locally primitively on T^{3-i} so, by lemma (2.2), every normal subgroup of $\overline{\Gamma^{3-i}}$ is either torsion free or co-compact. It remains to show that $\phi^{3-i}(\ker \phi^i)$ can not be co-compact. If it were it would admit a fundamental domain with a finite number of vertices $\{v_1, v_2, \ldots, v_n\}$ on T^{3-i}. For every $\gamma \in \Gamma$ find $\delta \in \ker \phi^i$ such that $\phi^{3-i}(\delta \circ \gamma)v_1 \in \{v_1, v_2, \ldots, v_n\}$. But $\phi^i(\gamma) = \phi^i(\delta \circ \gamma)$. Set $\Lambda = \{\gamma \in \Gamma | \phi^{3-i}(\gamma)v_1 = v_1\}$, then the above consideration imply that $\phi^i : \Gamma \longrightarrow \Gamma^i$ is still surjective even if we restrict it to a finite union of cosets of Λ. Namely choose $\{\gamma_k\}_{k=1\ldots n}$ such that $\phi^{3-i}(\gamma_k)v_1 = v_k$ then $\phi^i : \bigcup_{k=1}^n \gamma_k \Lambda \longrightarrow \Gamma^i$ is surjective. But the ϕ^i of each one of these cosets is discrete and the image of Γ is, by assumption, non-discrete which is a contradiction. $\square$

2.2 Proof of the main theorem (1.4)

In this section we prove theorem (1.4), A different proof for the same theorem appears in [Gla97]. We restate the theorem for the convenience of the reader.

Theorem 2.4. *Let $\Delta = T^1 \times T^2$ be the product of two regular trees of prime valences q_1, q_2 respectively. Then there is a finite number of conjugacy classes (in $\mathrm{Aut}(\Delta)$) of irreducible lattices $\Gamma < \mathrm{Aut}(\Delta)$ such that $X \stackrel{\text{def}}{=} \Gamma \backslash \Delta$ is a square.*

Proof. Let $\phi^i : \mathrm{Aut}(\Delta) \to \mathrm{Aut}(T^i)$ and $p^i : \Delta \to T^i$ be the projections and let $\Gamma^i = \phi^i(\Gamma)$. Assume, without loss of generality, that $q_2 \leq q_1$. The action of Γ on Δ admits a square as a fundamental domain. One such square with labels given to all its faces is drawn in figure (1). To each face σ we associate its stabilizer Γ_σ which is a finite group. There are natural group injections from the group of each cell to the groups of its faces. As in [Hae91] this information determines the lattice Γ up to conjugacy. We will give an upper bound $M = M(q_1, q_2)$, depending only on the primes q_i, for the order of the stabilizer of the square Γ_ξ, thus limiting the number of possible constructions to a finite number and proving the theorem.

Denote by $\Gamma^i_\sigma = \phi^i(\Gamma_\sigma)$ the image of Γ_σ acting on T^i and by $\Gamma^i_\sigma(n)$ the subgroup of Γ^i_σ stabilizing the ball $B_{T^i}(p^i(\sigma), n)$ of radius n around $p^i(\sigma)$.

By lemma (2.3) $\Gamma_\xi \cong \Gamma^2_\xi$ so it is enough to bound the order of Γ^2_ξ. This is achieved by showing that $\Gamma^2_\xi(2) = \langle e \rangle$, so that there exists an embedding of Γ^2_ξ into a finite group: $\Gamma^2_\xi \hookrightarrow \mathrm{Aut}(B_{T^2}(p^2(\xi), 2))$ giving the desired bound on the order of Γ_ξ:

$$\begin{aligned} |\Gamma_\xi| = \left|\Gamma^2_\xi\right| &\leq \left|\mathrm{Aut}(B_{T^2}(p^2(\xi), 2))\right| \\ &= (q_2 - 1)!^{2q_2} \\ &= (\min(q_1, q_2) - 1)!^{2\min(q_1, q_2)} \\ &\stackrel{\text{def}}{=} M(q_1, q_2) \end{aligned} \tag{2.1}$$

Let us assume the contrary: $\Gamma^2_\xi(2) \neq \langle e \rangle$. The groups $\Gamma^2_{\eta_1}(2)$ and $\Gamma^2_{\eta_3}(2)$ both contain $\Gamma^2_\xi(2)$ as a subgroup and are thus non trivial. $\Gamma_{p^1(\eta_1)} \stackrel{\text{def}}{=} \{\gamma \in \Gamma | \phi^1(\gamma)(p^1(\eta_1)) = p^1(\eta_1)\} \cong \Gamma_{\tau_1} *_{\Gamma_{\eta_1}} \Gamma_{\tau_4}$ and, $\Gamma_{p^1(\eta_3)} \cong \Gamma_{\tau_2} *_{\Gamma_{\eta_3}} \Gamma_{\tau_3}$ are locally transitive lattices in $\mathrm{Aut}(T^2)$, since T^2 is of prime valence these lattices are, in fact, locally primitive. The Thompson-Wielandt theorem (2.1), applied to these lattices implies that $\{\Gamma^2_\sigma(2)\}_{\sigma \in \{\eta_1, \eta_3\}}$ are all (non trivial) l-groups for some prime $l < q_2 \leq q_1$.

Consider the group $\Gamma_{p^2(\xi)} \cong \Gamma_{\eta_1} *_{\Gamma_\xi} \Gamma_{\eta_3}$ acting as a locally primitive lattice on T^1, and its normal subgroup Λ defined by the equation:

$$\begin{aligned} \Lambda &\stackrel{\text{def}}{=} \Gamma_{B_{T^2}(p^2(\xi), 2)} \\ &\stackrel{\text{def}}{=} \left\{\gamma \in \Gamma : \phi^2(\gamma)|_{B_{T^2}(p^2(\xi), 2)} = id\right\} \end{aligned} \tag{2.2}$$

Λ acts on T^1 with all its vertex stabilizers isomorphic to one of the two $l-$groups $\{\Gamma^2_\sigma(2) | \quad \sigma \in \{\eta_1, \eta_3\}\}$. By our assumption these groups are not trivial, together with lemma (2.3) this implies that Λ does not act freely on T^1. By lemma (2.2) there is a vertex v of T^1 for which the action $\Lambda_v \rightsquigarrow \mathrm{Lk}_{T^1}(v)$ is transitive. But this is a contradiction as Λ_v is an $l-$group and $|Lk(v)| = q_1$ where q_1, l are both prime and $q_1 > l$. □

3 More general square complexes.

The rest of the paper is devoted to the proof of the dichotomy (1.7) which says that many square complexes do not appear as orbit spaces of irreducible lattices with locally primitive projections. First we show that theorem (1.6) follows as a corollary from the dichotomy (1.7).

Proof of theorem (1.6) By passing to a finite index subgroup we may assume that Γ acts without inversion on both trees. By the dichotomy theorem (1.7) we should consider only two cases: X is a square or Γ is torsion free. If X is a square we conclude using theorem (1.4). If Γ is torsion free then it is determined (up to conjugation in $\mathrm{Aut}(\Delta)$) by the equation $\Gamma \cong \pi_1(X, \cdot)$. □

The main tool used in the proof of the dichotomy is an algorithm (theorem 3.10), answering a question similar to the one stated below.

Question 3.1. *Let $\Gamma < \mathrm{Aut}^0(T^1) \times \mathrm{Aut}^0(T^2)$ be a torsion free group, acting without inversion on each one of the factors. Assume Γ is given in the form of a fundamental group of a square complex $\Gamma = \pi_1(X, \cdot)$. Give an algorithm to construct the quotient graph of groups encoding the action of Γ on one of the trees, say T^2.*

A graph of groups consists of a graph X^2, groups associated to each vertex of its barycentric subdivision and monomorphisms associated with every edge of its barycentric subdivision. We

identify the vertices of X^2 with the connected components of the horizontal one-skeleton $X^{(1),1}$ of X, all of which are graphs. Using the fact that Γ acts without inversion on T^2, we show that the connected components of $X \backslash X^{(1),1}$ are just products of a graph and an open interval we identify these as the edges of X^2. The embeddings of all these into X define, in a natural way, a structure of a graph on the sets of edges and vertices just defined. Associate with every vertex (or edge) the group which is its fundamental group. If a is an edge of X^2 and v its terminal vertex then the embedding into X induces a covering morphism from the graph associated with a to the graph associated with v, giving rise to a monomorphism on the fundamental groups. We take this to be the monomorphism associated with the edge a.

Using the terminology introduced by Scott and Wall ([SW79]) we may say that the horizontal sections induce a structure of a graph of topological spaces (or more specifically a graph of graphs) on the complex X over the graph X^2 thus giving rise to a graph of groups structure on X^2. Note that the spaces associated to the vertices and edges of X^2 are graphs and in particular they admit the homotopy type of Eilenberg MacLane spaces of free groups.

A stronger version of this construction will be needed to deal with the case where Γ does not act freely on Δ. This gives rise to some technical complications: We must replace the complex X by a complex of groups $\Gamma(X)$ and view it as some kind of a "graph of graphs of groups". We are now obliged to consider covering morphisms in the sense of Bass' covering theory for graphs of groups ([Bas93]). There is no real difficulty involved but the discussion becomes a little technical.

Section (3.1) is devoted to a discussion of Bass' covering theory for graphs of groups (see [Bas93]). Section (3.2) then contains a precise statement and proof of theorem 3.10. The reader who wishes to skip the technical details can believe the qualitative description above and go directly to the proof of the dichotomy theorem in section (3.3).

3.1 Some Bass-Serre theory

3.1.1 Square complexes of groups

We give here a short summary of the facts that we need from Haefliger's theory of complexes of groups. No proofs are given here, our purpose is to make this paper more self contained and to fix the notation for square complexes of groups (Haefliger himself talks mainly about simplicial complexes).

We recall the basic definitions. Let X be a square complex. Define $V(X)$ and $E(X)$ to be the vertices and edges of its barycentric subdivision[3]. For each $a \in E(X)$ let $i(a), t(a) \in V(X)$ denote its initial and terminal vertices (by convention $i(a)$ is always the barycenter of the higher dimensional cell). Two edges $a, b \in E(X)$ are called composable if $t(b) = i(a)$, in this case we denote by $ab \in E(X)$ the edge with $i(ab) = i(b)$; $t(ab) = t(a)$.

A square complex of groups is a quadruple $G(X) = (X; G_\sigma; \phi_a; g_{a,b})$. Where X is a square complex, G associates with each $\sigma \in V(X)$ a group G_σ. ψ associates a monomorphism $\psi_a : G_{i(a)} \to G_{t(a)}$ with every edge $a \in E(X)$. Finally g associates an element $g_{a,b} \in G_{t(a)}$ with every pair of composable edges $a, b \in E(X)$ satisfying the compatibility equation:

$$\mathrm{Ad}(g_{a,b}) \circ \psi_{ab} = \psi_a \circ \psi_b \tag{3.1}$$

In particular a graph of groups is given by $G(X) = (X; G_\sigma; \phi_a)$ with X one dimensional (the elements $g_{a,b}$ do not appear in the one dimensional case).

[3]Note that the barycentric subdivision of X is already simplicial even if X was not.

Let $G'(X') = (X'; G'_\sigma; \psi'_a; g'_{a,b})$ be another square complex of groups. A morphism of square complexes of groups $\Phi : G(X) \to G'(X')$ is a triple $\Phi = (f, \phi_\sigma, g'_a)$ where $f : X \to X'$ is a square complex morphism, $\phi_\sigma : G_\sigma \to G'_{f(\sigma)}$ is a homomorphism of groups associated with every vertex $\sigma \in V(X)$ and g' associates an element $g'_a \in G'_{f(t(a))}$ with every edge $a \in E(X)$. These are subject to the following compatibility relations:

$$\mathrm{Ad}(g'_a) \circ \psi'_{f(a)} \circ \phi_{i(a)} = \phi_{t(a)} \circ \psi_a \qquad \forall a \in E(X) \tag{3.2}$$

$$\phi_{t(a)}(g_{a,b}) g'_{ab} = g'_a \psi'_{f(a)}(g'_b) g'_{f(a),f(b)} \qquad \forall a, b \in E(X);\ t(b) = i(a) \tag{3.3}$$

We sometimes call such a morphism a morphism of $G(X)$ to $G'(X')$ defined over f.

As in the one dimensional case square complexes of groups are used to encode group actions on simply connected square complexes. To every such action $\Gamma \rightsquigarrow \Delta$ (without inversion) one associates a complex of group structure $\Gamma\backslash\backslash\Delta$ on the quotient $\Gamma\backslash\Delta$. To a morphism of actions (i.e. intertwining map) one associates a morphism of the corresponding square complexes of groups. We recall the precise way in which this is done for the specific case that interests us in the course of the proof. Square complexes of groups and their morphisms which are obtained in this way are called *Developable*.

Unlike the one dimensional case not every square complex of groups is developable. If $G(X)$ is a developable complex of groups one can reconstruct from it the original action. An action reconstructed from such a developable complex is referred to as the action of the fundamental group of $G(X)$ on its universal cover, the notation is $\pi_1(G(X), \cdot) leadsto \widetilde{G(X)}$.

We need the notion of the path group to define both fundamental group and the universal cover of a complex of groups $G(X)$ The path group is defined by generators and relations:

$$FG(X) \stackrel{\text{def}}{=} \left\langle \bigcup_{\sigma \in VX} G_\sigma \cup \bigcup_{a \in EX} \{a^+, a^-\} \;\middle|\; \begin{array}{l} \text{the relations of the groups} \{G_\sigma\}_{\sigma \in V(X)} \\ (a^+)^{-1} = a^-; (a^-)^{-1} = a^+ \\ \psi_a(g) = a^- g a^+ g \in G_{i(a)} \\ (ab)^+ = b^+ a^+ g_{a,b}, \text{ for composable elements } a, b \in E(X) \end{array} \right\rangle \tag{3.4}$$

Theorem 3.2. *(Haefliger) A given square complex of groups is developable if and only if the natural homomorphisms $\{G_\sigma \to FG(X)\}_{\sigma \in V(X)}$ are all embeddings.*

We give here two equivalent definitions of the fundamental group of a complex.

definition I Let T be a maximal spanning tree in the one skeleton of the barycentric subdivision of X. Let N be the normal subgroup generated by all edges of T $N = \langle a^+ : a \in E(T) \rangle$. Now define

$$\pi_1(G(X), T) \stackrel{\text{def}}{=} \frac{FG(X)}{N} \tag{3.5}$$

definition II Choose a vertex $\sigma_0 \in V(X)$. For every vertex $\sigma \in V(X)$ a path from σ_0 to σ is a sequence $(g_0, e_1, g_1, e_2, \ldots e_n, g_n)$ with $e_j \in E^\pm(X)$, $t(e_i) = i(e_{i+1})$, $i(e_1) = \sigma_0$, $t(e_n) = \sigma$, and $g_j \in G_{t(e_j)} = G_{i(e_j)}$. To every such path corresponds an element of $FG(X)$ in the obvious way: $(g_0, e_1, g_1, e_2, \ldots e_n, g_n) \to g_0 e_1 g_1 e_2 \centerdot \ldots \centerdot e_n g_n$. Two paths are said to be homotopic if they represent the same element of $FG(X)$. We denote the image in $FG(X)$ of all paths from σ_0 to σ under this correspondence by $\pi_1(G(X), \sigma_0, \sigma)$ and define the fundamental group

$$\pi_1(G(X), \sigma_0) \stackrel{\text{def}}{=} \pi_1(G(X), \sigma_0, \sigma_0) \tag{3.6}$$

We may think of the fundamental group $\pi_1(G(X), \sigma_0)$ as the group of all loops from σ_0 to itself divided by the equivalence relation of homotopy and with the group action of concatenation of paths.

Theorem 3.3. *(Haefliger) Given a complex of groups $G(X)$, a vertex $\sigma_0 \in V(X)$ and a maximal spanning tree T in the one skeleton of the barycentric subdivision of X. There are obvious homomorphisms:*

$$\pi_1(G(X), \sigma_0) \to FG(X) \to \pi_1(G(X), T) \tag{3.7}$$

and the composition of the two homomorphism induces an isomorphism

$$\pi_1(G(X), \sigma_0) \cong \pi_1(G(X), T) \tag{3.8}$$

The universal cover of a developable complex of groups is defined in the following way. Choose a maximal spanning tree T in the one skeleton of the barycentric subdivision of X. The vertices of the barycentric subdivision of $\widetilde{G(X)}$ are given by:

$$\begin{aligned} V(\widetilde{G(X)}) &\stackrel{\text{def}}{=} \bigcup_{\sigma \in V(X)} \frac{\pi_1(G(X), T)}{G_\sigma} \\ &= \{(gG_\sigma, \sigma) : \sigma \in V(X), g \in \pi_1(G(X), T)\} \end{aligned} \tag{3.9}$$

The edges of the barycentric subdivision of $\widetilde{G(X)}$ are given by:

$$\begin{aligned} E(\widetilde{G(X)}) &\stackrel{\text{def}}{=} \bigcup_{a \in E(X)} \frac{\pi_1(G(X), T)}{G_{i(a)}} \\ &= \{(gG_{i(a)}, a) : a \in E(X), g \in \pi_1(G(X), T)\} \end{aligned} \tag{3.10}$$

The initial and terminal vertices of an edge by:

$$i(gG_{i(a)}, a) = (gG_{i(a)}, i(a)) \tag{3.11}$$

$$t(gG_{i(a)}, a) = (ga^+G_{t(a)}, t(a)) \tag{3.12}$$

The natural projection $p : G(X) \to X$ is given by:

$$p((gG_\sigma, \sigma)) = \sigma \tag{3.13}$$

$$p((gG_{i(a)}, a)) = a \tag{3.14}$$

Finely we define the action of $\pi_1(G(X), T) \rightsquigarrow \widetilde{G(X)}$ by the formulas:

$$h(gG_\sigma, \sigma) = (hgG_\sigma, \sigma) \tag{3.15}$$

$$h(gG_{i(a)}, a) = (hgG_{i(a)}, a) \tag{3.16}$$

3.1.2 Developable morphisms and Covering morphisms

Recall that Bass (in [Bas93, propositions 2.4,2.7;section 2.9]) associates with every morphism $\Phi : G(X) \to G(X')$ of graphs of groups a morphism of group actions on trees:

$$\left(\delta\Phi_{\sigma_0}, \delta\tilde{\Phi}\right) : \left(\pi_1(G(X), \sigma_0), (\widetilde{G(X), \sigma_0})\right) \to \left(\pi_1\left(G(X'), f(\sigma_0)\right), (\widetilde{G(X'), f(\sigma_0)})\right) \tag{3.17}$$

Local conditions on Φ are given there to determine when is the morphism an immersion (resp. a covering) in which case $\delta\Phi_{\sigma_0}$ and $\delta\tilde{\Phi}$ are injective (resp. $\delta\Phi_{\sigma_0}$ is a monomorphism of groups and $\delta\tilde{\Phi}$ is an isomorphism of trees). A similar theorem holds for complexes of groups of higher dimensions whose universal covers are products of trees (or more generally CAT(0) cellular complexes). For arbitrary complexes of groups of higher dimension only a partial generalization of the theorem holds. As Haefliger does not prove this theorem I found it desirable to restate it here, using the notations from [Hae91]. For the proof in the one dimensional case (which is all that we will be using later) see ([Bas93]). For an adaptation of that proof to the higher dimensional case see ([Gla97]).
remark: It should be noticed that a morphism Φ of graphs of groups, as Haefliger defines it in [Hae91, section 2.2] carries actually less information then the morphisms defined by Bass [Bas93, section 2.1]. For this reason it is not possible to reconstruct the morphisms Φ_{σ_0} and $\tilde{\Phi}$ as defined in [Bas93, Proposition 2.4] but only the morphisms $\delta\Phi_{\sigma_0}$ and $\delta\tilde{\Phi}$ defined in [Bas93, section 2.9].

Theorem 3.4. (Bass)
Let $G(X) = (X; G_\sigma; \psi_a; g_{a,b})$ and $G(X') = (X'; G'_\sigma; \psi'_a; g'_{a,b})$ be two developable complexes of groups and let $\Phi = (f, \phi_a, g'_a) : G(X) \to G(X')$ be a morphism of complexes of groups. Then Φ induces a morphism of actions

$$\begin{tikzcd} \pi_1(G(X), \sigma_0) \arrow[r, "\delta\Phi_{\sigma_0}"] \arrow[d, wavy, "\wr"] & \pi_1\left(G(X'), f(\sigma_0)\right) \arrow[d, wavy, "\wr"] \\ \widetilde{G(X)} \arrow[r, "\delta\tilde{\Phi}"] & \widetilde{G(X')} \end{tikzcd} \tag{3.18}$$

where $\delta\Phi_{\sigma_0}$ is induced by a homomorphism defined on the path groups $\Phi : FG(X) \to FG(X')$ which is defined on generators as follows:

$$\begin{array}{ll} \Phi(g) = \phi_\sigma(g) & \forall \sigma \in VX \ g \in G_\sigma \\ \Phi(a^+) = f(a)^+ (g'_a)^{-1} & \forall a \in EX \end{array} \tag{3.19}$$

and $\delta\tilde{\Phi}$ is defined on the universal cover by:

$$\begin{array}{ll} \delta\tilde{\Phi}(gG_\sigma, \sigma) = (\delta\Phi_{\sigma_0}(g) G_{f(\sigma)}, f(\sigma)) & \forall \sigma \in VX \ g \in \pi_1(G(X), \sigma_0) \\ \delta\tilde{\Phi}(gG_{i(a)}, a) = (\delta\Phi_{\sigma_0}(g) G_{i(f(a))}, f(a)) & \forall a \in EX \ g \in \pi_1(G(X), \sigma_0) \end{array} \tag{3.20}$$

□

Definition 3.5. (Bass)
Φ is called an immersion (resp. a covering) if for every $\sigma \in V(X)$ the following properties hold:

1. ϕ_σ is injective.
2. The morphism induced by $\delta\tilde{\Phi}$ on the links $Lk(\tilde{\sigma}) \to Lk(\widetilde{f(\sigma)})$ is injective (resp. an isomorphism).

Theorem 3.6. (Bass)
Using the notation of theorem (3.4):

1. Φ is a covering iff $\delta\Phi_{\sigma_0}$ is injective and $\delta\tilde{\Phi}$ is an isomorphism.
2. Assume that $\widetilde{G(X)}$ and $\widetilde{G(X')}$ are both products of trees, then Φ is an immersion if $\delta\Phi_{\sigma_0}$ and $\delta\tilde{\Phi}$ are both injective.

□

3.1.3 Decomposition of $pi_1(G(X),\cdot)$ as a semidirect product.

The following proposition allows us to represent any fundamental group of a graph of groups as a semi-direct product (see [Ser80]).

Proposition 3.7. *Let $G(X) = (X; G_\sigma; \psi_a)$ be a graph of groups, $N \triangleleft \pi_1(G(X), \sigma_0)$ the subgroup generated by all vertex stabilizers, then*

$$\pi_1(G(X), \sigma_0) \cong \pi_1(X, \sigma_0) \ltimes N \tag{3.21}$$

Proof. The existence of the short exact sequence

$$1 \longrightarrow N \longrightarrow \pi_1(G(X), \sigma_0) \xrightarrow{\xi} \pi_1(X, \sigma_0) \longrightarrow 1 \tag{3.22}$$

is standard so I will not repeat the argument. We have only to show that the sequence is split. There is, of course, a natural immersion of graphs of groups in the sense of definition (3.5) of X (viewed as a graph of trivial groups) into $G(X)$. By theorems (3.4) and (3.6) this immersion gives rise to an injective homomorphism on the fundamental groups: $\zeta : \pi_1(X, \sigma_0) \longrightarrow \pi_1(G(X), \sigma_0)$. Going back to the definitions one can now verify that $\xi \circ \zeta = id_{\pi_1(X,\sigma_0)}$. □

Given a morphism of graphs of groups, the following proposition gives the connection between the semi-direct decomposition of proposition (3.7) and the morphism of group actions constructed in theorems (3.4) and (3.6).

Proposition 3.8. *Let $G(X) = (X; G_\sigma; \psi_a)$ and $G'(X') = (X'; G'_\sigma; \psi'_a)$ be graphs of groups and $\Phi = (f, \phi_\sigma, g'_a) : G(X) \to G'(X')$ a morphism. Denote by $\pi_1(G(X), \sigma_0) = F \ltimes N$ and $\pi_1(G'(X'), f(\sigma_0)) = F' \ltimes N'$ the semi-direct product decompositions given by proposition (3.7). Let $\delta\Phi_{\sigma_0} : F \ltimes N \to F' \ltimes N'$ the homomorphism induced on the fundamental groups by Φ as in theorem (3.4), then the following hold:*

- $\delta\Phi_{\sigma_0}(N) \subset N'$
- *By the previous observation there is an induced homomorphism of groups $\overline{\delta\Phi_{\sigma_0}} : F \cong \pi_1(G(X), \sigma_0)/N \to F' \cong \pi_1(G'(X'), \sigma_0)/N'$. There is another natural morphism $f_* : F = \pi_1(X, \sigma_0) \to F' = \pi_1(X', f(\sigma_0))$ induced on the fundamental groups by the graph morphism f. We claim that these morphisms are the same:*

$$f_* = \overline{\delta\Phi_{\sigma_0}} \tag{3.23}$$

Proof. $N \triangleleft \pi_1(G(X), \sigma_0)$ is generated as a normal subgroup by $\{G_\sigma | \sigma \in V(X)\}$. By the definition of $\delta\Phi_{\sigma_0}$ in equation (3.19) $\delta\Phi_{\sigma_0}(G_\sigma) < G'_{f(\sigma)} < \langle G'_\eta | \eta \in V(X')\rangle = N'$. This proves the first claim. It is now possible to define the quotient morphism in the second part of the claim. $(e_0, e_1, \ldots, e_n)$ is a typical element of F corresponding to $(e_0, e_1, \ldots, e_n)N$ under the isomorphism $F \cong \pi_1(G(X), \sigma_0)/N$. Now, using equation (3.19) the later element is mapped by $\overline{\delta\Phi_{\sigma_0}}$ onto $(f(e_0), (g'_{e_0})^{-1}, f(e_1), \ldots, (g'_{e_n})^{-1})N' = (f(e_0), f(e_1), \ldots, f(e_n))N' \in \pi_1(G'(X'), \sigma_0)/N'$ the last equality is by normality $N' \triangleleft \pi_1(G'(X'), \sigma_0)$. On the other hand, $f_*(e_0, e_1, \ldots, e_n) = (f(e_0), f(e_1), \ldots, f(e_n))$. A comparison of the two expressions completes the proof. □

3.2 Description of the action of Γ on the factor trees

Given a group $\Gamma < \mathrm{Aut}^0(T^1)\times\mathrm{Aut}^0(T^2)$, in the form of a complex of groups $\Gamma(X) = (X;\Gamma_\sigma;\psi_a;\gamma_{a,b}) = \Gamma\backslash\backslash\Delta$. We describe an algorithm for finding the graph of groups $\left(\widehat{X^i};\widehat{H^i_\sigma};\widehat{\xi^i_a}\right)$ encoding the action of Γ on T^i.

3.2.1 The graph $\widehat{X^i}$

Let $X^{(1)}$ be the one-skeleton of X and write it as a union of one-skeletons in the i and the $3-i$ directions: $X^{(1)} = X^{(1),i} \cup X^{(1),3-i}$. We will need the following lemma in order to define the edges of X^i.

Claim 3.9. *Every connected component W of $X\backslash X^{(1),3-i}$ is a product of a graph with an open edge.*

Proof. Clearly W is locally isomorphic to such a product, i.e. it is a bundle over a graph with an open edge as a fiber:

$$\begin{tikzcd} (0,1) \arrow[r] & W \arrow[d, "p"] \\ & \mathrm{Gr} \end{tikzcd} \tag{3.24}$$

I claim that this bundle is, in fact, trivial. Assume the contrary, then we can find a loop α in the graph Gr such that $p^{-1}(\alpha)$ is a Möbius band. Viewing α as a an element of $\Gamma = \pi_1(X,\cdot)$, where $\cdot$ is some base point on α, this element will be an inversion when acting on the T^i factor of the universal covering, contradicting our assumption that γ acts without inversion on both trees. $\square$

If $W = e \times \mathrm{Gr} \subset X\backslash X^{(1),3-i}$ is such a connected component then its closure in X contains two (not necessarily distinct) connected components of $X^{(1),3-i}$ glued to it along the two "sides" of the open edge e. Furthermore there are well defined "gluing maps" from Gr to these two graphs.

We are now ready to define the graph X^i

- We identify the set of vertices with the connected components of $X^{(1),3-i}$ and the set of (geometric) edges with the connected components of $X\backslash X^{(1),3-i}$. The set $V\widehat{X^i}$ of vertices of the barycentric subdivision will just be the disjoint union of these two sets. We will refer to the elements of $V\widehat{X^i}$ by small Greek letters (e.g. σ) when we think of them abstractly. When we wish to refer to the corresponding subset of X we adapt the notation $W^i_\sigma \times \sigma \subset X$ where W^i_σ is a graph and σ is either a point or an open interval. By abuse of notation we will sometimes identify W^i_σ with $W^i_\sigma \times \sigma$.

- We identify the set $E\widehat{X^i}$ of edges of the barycentric subdivision with pairs $a = (\epsilon,\sigma)$ where $W^i_\sigma \subset \overline{W^i_\epsilon}$. It is possible that the closure of W^i_ϵ will contain only one connected component of $X^{(1),3-i}$, say W^i_σ. In fact, this happens whenever there is a loop in the graph $\widehat{X^i}$. In such a case we associate two different edges of the barycentric subdivision with the pair (ϵ,σ). The barycentric subdivision of any graph (or complex) is naturally oriented. We will always think of the edges of the barycentric subdivision as oriented from the higher dimensional cells to the lower dimensional cells. In our case from the edges to the vertices.

- If $a = (\epsilon, \sigma) \in E\widehat{X^i}$ then there is a natural map $l^{i,a} : W^i_\epsilon \to W^i_\sigma$, given by the way that W^i_σ is glued to W^i_ϵ in the closure $\overline{W^i_\epsilon}$. Note that if the pair (ϵ, σ) defines two different edges a, a' (i.e. there is a loop in $\widehat{X^i}$) then indeed there are two different ways in which W^i_σ is glued to W^i_ϵ and these give rise to two different graph morphisms $l^{i,a}, l^{i,a'}$. These maps are not necessary for the definition of $\widehat{X^i}$ but we will need them later.

There are natural projection maps $\widehat{f^i} : X \to \widehat{X^i}$ satisfying $\widehat{f^i}^{-1}(\sigma) = W^i_\sigma$.

3.2.2 The groups $\widehat{H^i_\sigma}$

There is a natural structure of a graph of groups on W^i_σ induced from $\Gamma(X)$ for every $\sigma \in V\widehat{X^i}$. Let us denote this graph of groups by $\widehat{H^i_\sigma}(W^i_\sigma) = (W^i_\sigma; \Gamma_\eta; \psi_a; \gamma_{a,b})$. Choose any section over $\widehat{f^i}$

$$\begin{aligned} \tau^i_* : V(\widehat{X^i}) &\to V(X) \\ \sigma &\to \tau^i_\sigma \end{aligned} \tag{3.25}$$

Define a group corresponding to every vertex or edge $\sigma \in V\widehat{X^i}$

$$\widehat{H^i_\sigma} \stackrel{\text{def}}{=} \pi_1(\widehat{H^i_\sigma}(W^i_\sigma), \tau^i_\sigma) \tag{3.26}$$

3.2.3 The monomorphisms associated with edges of the barycentric subdivision of X^i

- Let $a \in E\widehat{X^i}$ be an edge in the barycentric subdivision of $\widehat{X^i}$ with $i(a) = \epsilon; t(a) = \sigma$. We associate with a a covering morphism of graphs of groups (definition (3.5)) defined over $l^{i,a}$, denoted by $\widehat{\Theta^i_a} = (l^{i,a}; \widehat{\phi^{i,a}_\eta}; \widehat{\delta^{i,a}_b}) : \widehat{H^i_\epsilon}(W^i_\epsilon) \to \widehat{H^i_\sigma}(W^i_\sigma)$ where the definitions are the following:
  - $l^{i,a}$ takes a point w to the unique point $l^{i,a}(w) \in W^i_\sigma \subset X$, satisfying $\widehat{f^i}(l^{i,a}(w)) = \sigma$ and $\widehat{f^{3-i}}(l^{i,a}(w)) = \widehat{f^{3-i}}(w)$.
  - $\widehat{\phi^{i,a}_\eta} \stackrel{\text{def}}{=} \psi_{[\eta, l^{i,a}_\eta]} = \psi_e$
  - $\widehat{\delta^{i,a}_b} \stackrel{\text{def}}{=} \gamma_{b,[t(b), l^{i,a}(t(b))]} \left(\gamma_{[i(b), l^{i,a}(i(b))], l^{i,a}(b)}\right)^{-1} = \gamma_{b,e}(\gamma_{c,d})^{-1}$

  Where the edges c, d, e are defined in figure (2). We write $[i(e), t(e)]$ instead of e for an edge in the barycentric subdivision in some of the above formulas.

- Using Bass' theorems (3.4) and (3.6), the covering morphism just defined induces an injective homomorphism on the corresponding fundamental groups:

$$(\widehat{\delta\Theta^i_a})_{\tau^i_\epsilon} : \widehat{H^i_\epsilon} = \pi_1(\widehat{H^i_\epsilon}(W^i_\epsilon), \tau^i_\epsilon) \to \pi_1(\widehat{H^i_\sigma}(W^i_\sigma), l^{i,a}(\tau^i_\epsilon)) \tag{3.27}$$

  Explicitly this morphism is induced from a morphism defined on the path groups $\Theta : F\widehat{H^i_\epsilon}(W^i_\epsilon) \to F\widehat{H^i_\sigma}(W^i_\sigma)$ by the following requirements on the generators:

  - $\Theta(g) = \widehat{\phi^{i,a}_\eta}(g) \quad \forall g \in \Gamma_\eta \quad \forall \eta \in VW^i_\epsilon$

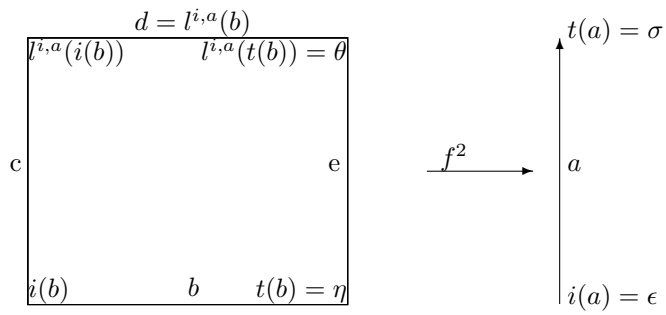

Figure 2: A typical "quarter cell" in $(f^2)^{-1}(a)$

- $\Theta(b^+) = l^{i,a}(b)^+(\widehat{\delta_b^{i,a}})^{-1} \quad \forall b \in EW_\epsilon^i$

- Choose an arbitrary (generalized) path from τ_σ^i to $l^{i,a}(\tau_\epsilon^i)$

$$\alpha_a \in \pi_1(\widehat{H_\sigma^i}(W_\sigma^i), \tau_\sigma^i, l^{i,a}(\tau_\epsilon^i)) \tag{3.28}$$

  Here $\pi_1(X, \cdot, \cdot)$ is Haefligers notation for the set of all generalized paths from the first point to the second up to homotopy, If the two points are the same this coincides with the definition of the fundamental group. Such a path defines an isomorphism $Ad(\alpha_a) : \pi_1(\widehat{H_\sigma^i}(W_\sigma^i), l^{i,a}(\tau_\epsilon^i)) \to \pi_1(\widehat{H_\sigma^i}(W_\sigma^i), \tau_\sigma^i)$. Composing this isomorphism with the one defined in equation (3.27) we obtain the desired injection.

$$\widehat{\xi_a^i} \stackrel{\text{def}}{=} Ad(\alpha_a) \circ (\widehat{\delta\Theta_a^i})_{\tau_\epsilon^i} : \widehat{H_\epsilon^i} \to \widehat{H_\sigma^i} \tag{3.29}$$

3.2.4 Summary - Graph of group structure

We have thus defined a graph of groups structure on $\widehat{X^i}$

$$\widehat{\Gamma}(\widehat{X^i}) \stackrel{\text{def}}{=} (\widehat{X^i}; \widehat{H_\sigma^i}; \widehat{\xi_a^i}) \tag{3.30}$$

where the groups $\widehat{H_\sigma^i}$ are defined in equation (3.26) and the injections $\widehat{\xi_a^i}$ are defined in equation (3.29).

Theorem 3.10. *Let*

- $\Delta = T^1 \times T^2$ *be a product of two trees,* $\Gamma < \mathrm{Aut}^0(T^1) \times \mathrm{Aut}^0(T^2)$ *a group acting without inversion on each one of the trees and* $\Gamma(X) = (X; \Gamma_\sigma; \psi_a; \gamma_{a,b}) = \Gamma\backslash\backslash\Delta$ *the quotient complex of groups.*

- *The group* Γ *acts on* T^i *via the homomorphism* ϕ^i*, (this action is effective iff* $\phi^i|_\Gamma$ *is injective). Let* $\Gamma(X^i) = (X^i; H_\sigma^i; \xi_a^i) = \Gamma\backslash\backslash T^i$ *be the quotient graph of groups and* $f^i : X \to X^i$ *the natural projection maps.*

- $\widehat{\Gamma}(\widehat{X^i}) = (\widehat{X^i}; \widehat{H^i_\sigma}; \widehat{\xi^i_a})$ *the graph of groups defined by the procedure described above and* $\widehat{f^i} : X \to \widehat{X^i}$ *the natural projection maps.*

Then:

1. *There exists a canonical isomorphism of graphs* $j : X^i \to \widehat{X^i}$ *making the following diagram commutative:*

$$\begin{tikzcd} & X \arrow[dl, "\widehat{f^i}"'] \arrow[dr, "f^i"] & \\ \widehat{X^i} & & X^i \arrow[ll, "j"] \end{tikzcd} \tag{3.31}$$

2. *The graph of groups structure defined in equation (3.30) is dependent on the choices made* [4] *only up to a co-boundary* [5]*.*

3. *There is an isomorphism of graphs of groups defined over* j *between* $\Gamma(X^i)$ *and* $\widehat{\Gamma}(\widehat{X^i})$

Proof. The projection map $p^i : \Delta \to T^i$ induces a map $f^i : X \to X^i$. It is clear that every W^i_σ is mapped by f^i into a single vertex (or edge) of X^i. In order to prove (1) we need only the following lemma:

Lemma 3.11. $(f^i)^{-1}(\sigma)$ *is connected for every vertex* $\sigma \in VX^i$ *of the barycentric subdivision of* X^i

Proof. Assume $f^i(\eta_1) = f^i(\eta_2) = \sigma$ let $\tilde{\eta_1}, \tilde{\eta_2}$ be liftings of η_1, η_2. Obviously $\{p^i(\tilde{\eta_j})\}_{j\in\{1,2\}}$ are both mapped to $\sigma(\operatorname{mod} \phi^i(\Gamma))$ so that there exist an element $\gamma_i \in \phi^i(\Gamma)$ such that $\gamma_i p^i(\tilde{\eta_1}) = p^i(\tilde{\eta_2})$. Take $\gamma \in \Gamma$ satisfying $\gamma_i = \phi^i(\gamma)$ so that $p^i(\gamma\tilde{\eta_1}) = p^i(\tilde{\eta_2}) = p^i([\gamma\tilde{\eta_1}, \tilde{\eta_2}])$. The line $[\gamma\tilde{\eta_1}, \tilde{\eta_2}]$ is mapped $(\operatorname{mod} \Gamma)$ to a path connecting η_1 to η_2 inside $(f^i)^{-1}(\sigma)$. □

The canonical map j will now be given by:

$$j(\sigma) = (f^i)^{-1}(\sigma) \tag{3.32}$$

We briefly recall the definition of the complex of groups structure on X (resp. the graph of group structure on X^i) associated with the action $\Gamma \rightsquigarrow \Delta$ (resp. $\Gamma \rightsquigarrow T^i$). The construction involves certain arbitrary choices, a different set of choices will change the complex (resp. graph) of groups structure by a coboundary. We choose liftings for every vertex VX (resp. VX^i) of the barycentric subdivision

$$\{\tilde{\sigma} \in \Delta\}_{\sigma\in V(X)} \quad (\text{resp.}\{\overline{\sigma} \in T^i\}_{\sigma\in V(X^i)}) \tag{3.33}$$

and elements of Γ (resp. Γ^i)

$$\{k_a \in \Gamma\}_{a\in EX} \quad (\text{resp. } \{m_a \in \Gamma^i\}_{a\in EX^i}) \tag{3.34}$$

[4] of the section τ^i_* in equation (3.25), and of the paths α_a in equation (3.28)

[5] See Haefliger's paper [Hae91] for more details on changing a complex of groups by a co-boundary

Satisfying $k_a(t(\tilde{a})) = \widetilde{t(a)}$ (resp. $m_a(t(\overline{a})) = \overline{t(a)}$). The complex of group structure $\Gamma(X) = (X;\Gamma_\sigma;\psi_a;\gamma_{a,b})$ (resp. $\Gamma^i(X^i) = (X^i;H^i_\sigma;\xi^i_a)$) will now be given by the following equations:

$$\begin{aligned} &\Gamma_\sigma \stackrel{\text{def}}{=} \mathrm{Stab}_\Gamma(\tilde{\sigma}) \quad (\text{resp. } H^i_\sigma \stackrel{\text{def}}{=} \mathrm{Stab}_\Gamma(\overline{\sigma})) \\ &\psi_a \stackrel{\text{def}}{=} \mathrm{Ad}(k_a) \qquad (\text{resp. } \xi^i_a \stackrel{\text{def}}{=} \mathrm{Ad}(m_a)) \\ &\gamma_{a,b} \stackrel{\text{def}}{=} k_a k_b k_{ab}^{-1} \end{aligned} \tag{3.35}$$

To prove (3) we will show that the graph of groups $\widehat{\Gamma}(\widehat{X^i})$ in fact describes the action of Γ on T^i via the homomorphism ϕ^i. To do this we will use the freedom to change the arbitrary choices made in equations (3.33,3.34). On the one hand this will change $\Gamma(X)$ and $\Gamma(X^i)$ only by a coboundary, and on the other hand it will enable us to identify $\Gamma(X^i)$ with $\widehat{\Gamma}(\widehat{X^i})$ (i.e. H^i_σ with $\widehat{H^i_\sigma}$ and ξ^i_a with $\widehat{\xi^i_a}$.).

For every $\sigma \in VX^i$, set $S^i_\sigma \stackrel{\text{def}}{=} (p^i)^{-1}(\overline{\sigma}) \cong T^{3-i} \subset \Delta$. We can identify $H^i_\sigma = \{\gamma \in \Gamma | \gamma S^i_\sigma = S^i_\sigma\}$ as the subgroup of Γ stabilizing S^i_σ. Since W^i_σ is connected (lemma 3.11) S^i_σ is mapped surjectivly on W^i_σ. It follows now from the following lemma that $W^i_\sigma \cong H^i_\sigma \backslash S^i_\sigma$.

Lemma 3.12. *If $x, y \in VS^i_\sigma$ are (not necessarily distinct) points then*

$$\{\gamma \in \Gamma | \gamma x = y\} \subset H^i_\sigma.$$

Proof. This is just a restatement of the fact that $\mathrm{Aut}(\Delta) = \mathrm{Aut}(T^1) \times \mathrm{Aut}(T^2)$, If the trees are not isomorphic. Even if the trees are isomorphic, we ignore the isomorphisms that flips the two trees. □

There are two natural graph of group structures on W^i_σ

- The graph of groups structure coming from the embedding in X which was defined in 3.2.2 $\widehat{H^i_\sigma(W^i_\sigma}$.
- The quotient graph of groups $H^i_\sigma \backslash\backslash S^i_\sigma$. This graph of groups is defined only up to a coboundary arbitrary choices of liftings and group elements have to be made, similar to the choices made in equations 3.33 and 3.34 before a graph of groups is constructed.

Since S^i_σ maps onto W^i_σ we can make the choices in equation (3.33) in such a way that $\tilde{\tau} \in S^i_\sigma$ for all $\tau \in VW^i_\sigma$. Lemma 3.12 now implies that $k_a \in H^i_\sigma$ for every $a \in EW^i_\sigma$. But now we can make the exact same choices in order to define the second graph of group structure on W^i_σ. Having made all these choices the two graph of groups become identical, enabling us to identify $\widehat{H^i_\sigma}(W^i) = H^i_\sigma \backslash\backslash S^i_\sigma$ and consequently

$$\widehat{H^i_\sigma} \stackrel{\text{def}}{=} \pi_1(\widehat{H^i_\sigma}(W^i_\sigma), \tau^i_\sigma) \cong H^i_\sigma \stackrel{\text{def}}{=} \{\gamma \in \Gamma | \gamma\overline{\sigma} = \overline{\sigma}\} \tag{3.36}$$

The isomorphism between the fundamental group and the group of deck transformations is not canonical, in fact it is dependent on a choice of a lifting of the base point τ^i_σ to the universal covering. We choose this base point to be $\widetilde{\tau^i_\sigma}$, thus picking a specific isomorphism in equation 3.36.

We will argue in a similar way that we can identify ξ^i_a with $\widehat{\xi^i_a}$. Pick an edge $a \in EX^i$ with $i(a) = \epsilon$, $t(a) = \sigma$. We denote by $\tau^i_a \in EX$ the edge of the barycentric subdivision of X satisfying

$i(\tau_a^i) = \tau_\epsilon^i$ and $t(\tau_a^i) = l^{i,a}(\tau_\epsilon^i)$. We make an arbitrary choice of an element $k_a \stackrel{\text{def}}{=} k_{\tau_a^i} \in \Lambda$ in equation 3.34. This element will satisfy $k_a(t(\widetilde{\tau_a^i})) = \widetilde{t(\tau_a^i)}$.

The action $H_\epsilon^i \rightsquigarrow S_\epsilon^i$ and the action $H_\sigma^i \rightsquigarrow S_\sigma^i$ are compatible in the sense that the following diagram is commutative:

$$\begin{array}{ccc} H_\epsilon^i & \xrightarrow{Ad(k_a)} & H_\sigma^i \\ \rightsquigarrow & & \rightsquigarrow \\ S_\epsilon^i & \xrightarrow{k_a \circ \widetilde{l^{i,a}}} & S_\sigma^i \end{array} \tag{3.37}$$

Here $\widetilde{l^{i,a}}$ is just the lifting of $l^{i,a}$ to the universal cover.

Let us recall how the morphism of actions given by (3.37) induces a covering morphism of graphs of groups our goal is to show that this is the same as the covering morphisms of groups $\widetilde{\xi_a^i}$ defined in the last section.

We have to make some arbitrary choices, select group elements

$$\{h_\eta \in H_\sigma^i\}_{\eta \in VW_\epsilon^i} \quad \textit{such that } h_\eta(k_a \circ \widetilde{l^{i,a}}(\tilde{\eta})) = \widetilde{l^{i,a}(\eta)} \tag{3.38}$$

And define

$$\begin{array}{rcl} \phi_\eta & \stackrel{\text{def}}{=} & \mathrm{Ad}(h_\eta \circ k_a) \\ g'_b & \stackrel{\text{def}}{=} & h_{t(b)}[k_a k_b k_a^{-1}](h_{i(b)})^{-1}(k_{l^{i,a}(b)})^{-1} \end{array} \tag{3.39}$$

We now choose the elements $\{k_e\}$ from equation (3.34) for every edge $e \in EX^{(1),i}$ (i.e. an edge mapping on an edge of T^i and a vertex of T^{3-i}). The following choice makes everything work out:

$$k_e \stackrel{\text{def}}{=} h_{i(e)} \circ k_{f^i(e)} = h_{i(e)} \circ k_{\tau_{f^i(e)}} \tag{3.40}$$

Substituting 3.40 in equation (3.39) for an e such that $i(e) = \eta$ and $f^i(e) = a$, we obtain:

$$\begin{array}{rcl} \phi_\eta & = & \mathrm{Ad}(h_\eta \circ k_a) \\ & = & \mathrm{Ad}(k_e) \\ & = & \psi_e \end{array} \tag{3.41}$$

The last inequality comes from equation (3.35). For the twisting elements we get:

$$\begin{array}{rcl} g'_b & = & h_{t(b)}[Ad(k_a)(k_b)](h_{i(b)})^{-1}(k_{l^{i,a}(b)})^{-1} \\ & = & \left(h_{t(b)}k_a\right) k_b \left(h_{i(b)}k_a\right)^{-1} \left(k_{l^{i,a}(b)}\right)^{-1} \\ & = & k_{[t(b),l^{i,a}(t(b))]} k_b (k_{l^{i,a}(b)} k_{[i(b),l^{i,a}(i(b))]})^{-1} \\ & = & \gamma_{b,[t(b),l^{i,a}(t(b))]} \gamma^{-1}_{[i(b),l^{i,a}(i(b))],l^{i,a}(b)} \end{array} \tag{3.42}$$

Again the last equality comes form equation (3.35). Looking at equations (3.41,3.42) we realize that we have reproduced exactly the definition of the covering morphism $\widehat{\Theta_a^i}$ given in section (3.2.3).

We have so far established the commutativity of the following diagram:

$$\begin{tikzcd}
H^i_\epsilon \arrow[rr, "Ad(k_a)"] \arrow[d] & & H^i_\sigma \arrow[dl] \arrow[dr] & \\
\widehat{H^i_\epsilon} \cong \pi_1(\widehat{H^i_\epsilon}(W^i_\epsilon), \tau^i_\epsilon) \arrow[r, "(\widehat{\delta\Theta^i_a})_{\tau^i_\epsilon}"] & \pi_1(\widehat{H^i_\sigma}(W^i_\sigma), l^{i,a}(\tau^i_\epsilon)) \arrow[rr, "Ad(\beta_a)"] & & \widehat{H^i_\sigma} \cong \pi_1(\widehat{H^i_\sigma}(W^i_\sigma), \tau^i_\sigma)
\end{tikzcd} \tag{3.43}$$

The identification of the two groups $\pi_1(\widehat{H^i_\sigma}(W^i_\sigma), l^{i,a}(\tau^i_\epsilon))$ and (resp. $\widehat{H^i_\sigma} = \pi_1(\widehat{H^i_\sigma}(W^i_\sigma), \tau^i_\sigma)$) with H^i_σ, the group of deck transformations on S^i_σ, is given by the choice of $k_a(\widetilde{l^{i,a}}(\widetilde{\tau^i_\epsilon}))$ (resp. $\widetilde{\tau^i_\sigma}$)as a base point for S^i_σ. $\beta_a \in \pi_1(\widehat{H^i_\sigma}(W^i_\sigma), \tau^i_\sigma, l^{i,a}(\tau^i_\epsilon))$ is a (generalized) path chosen in order to make the diagram commutative, i.e. a projection of a path connecting the two base points mentioned above in S^i_σ. We conclude using equation 3.29 that.

$$\begin{aligned}
\widehat{\xi^i_a} &\stackrel{\text{def}}{=} Ad(\alpha_a) \circ (\widehat{\delta\Theta^i_a})_{\tau^i_\epsilon} \\
&= Ad(\alpha_a * \beta_a^{-1}) \circ Ad(k_a) \\
&= Ad(h_a \circ k_a)
\end{aligned} \tag{3.44}$$

Where $h_a \in H^i_\sigma \subset \Gamma$ corresponds to the path $\alpha_a * \beta_a^{-1}$ via our identification of H^i_σ with $\widehat{H^i_\sigma}$. Finally if we make the choice $m_a \stackrel{\text{def}}{=} h_a \circ k_a \in \Gamma$ in the definitions 3.35 of the graph of group structure $\Gamma(X^i)$ we can identify ξ^i_a with $\widehat{\xi^i_a}$ and this completes the proof of part 3.

Finally for the proof of 2, it is clear that if we made a different set of choices for the definition of the graph of group structure $\widehat{\Gamma}(\widehat{X^i})$ we could still establish the isomorphism with the graph of groups $\Gamma(X^i)$ up to a coboundary. This proves that the two different choices give rise to two different graph of group structures on $\widehat{X^i}$ which differ by a coboundary. □

3.3 Proof of the Dichotomy Theorem (1.7)

Use the notation of section (3.2). Here are a few observations, exploiting the machinery that we have collected so far.

- Under the conditions of theorem (1.7), X^i is an edge ${}_y \overset{\epsilon}{\longleftrightarrow} {}_x$. Let us denote the edges of the barycentric subdivision here by: $a_x \stackrel{\text{def}}{=} [\epsilon, x]$ and $a_y \stackrel{\text{def}}{=} [\epsilon, y]$.
- $\Gamma^i(X^i)$ is now an edge of groups given by $\Gamma^i(X^i) = (X^i; H^i_\sigma; \xi^i_a)$. By section (3.2), $H^i_\sigma \cong \pi_1(H^i_\sigma(W^i_\sigma), \tau^i_\sigma)$
- Using proposition (3.7), one may write $H^i_\sigma = F^i_\sigma \ltimes N^i_\sigma$ where $F^i_\sigma \stackrel{\text{def}}{=} \pi_1(W^i_\sigma, \tau^i_\sigma)$ and $N^i_\sigma \stackrel{\text{def}}{=} \langle \Gamma_\eta | \eta \in V(W^i_\sigma) \rangle$.
- By proposition (3.8), $\xi^i_{a_\sigma}(N^i_\epsilon) < N^i_\sigma$ and the morphism induced from $\xi^i_{a_\sigma}$ on the quotient $\overline{\xi^i_{a_\sigma}} : F^i_\epsilon \to F^i_\sigma$ is just the morphism $(l^{i,a_\sigma})_*$.
- By assumption X is covered by a product of two trees. It is well known that this is equivalent to the assertion that the link of every vertex in X is a full bi-partite graph. This, in turn, implies

that the graph morphism l^{i,a_σ} is a covering and, therefore, the induced homomorphism on the fundamental groups $\overline{\xi^i_{a_\sigma}} = (l^{i,a_\sigma})_* : \pi_1(W^i_\epsilon, \tau^i_\epsilon) \to \pi_1(W^i_\sigma, \tau^i_\sigma)$ is injective for all $\sigma \in \{x, y\}$. We conclude that:

$$\xi^i_{a_\sigma}(F^i_\epsilon) \cap N^i_\sigma = \{id\} \tag{3.45}$$

The following is a direct result of the action being locally primitive.

Proposition 3.13. *$\xi^i_{a_\sigma}(H^i_\epsilon) \lneqq H^i_\sigma$ is a maximal subgroup.*

Proof. The action of Γ^i on T^i is isomorphic to the action of the amalgam associated with the edge of groups $\Gamma^i(X^i)$ on its universal cover. In order to obtain the local action on the link of a vertex one must divide both $\xi^i_{a_\sigma}(H^i_\epsilon)$ and H^i_σ by the normal subgroup $(H^i_\sigma)_1$ stabilizing a sphere of radius one. By the assumption of locally primitive projections $\xi^i_{a_\sigma}(H^i_\epsilon)/(H^i_\sigma)_1 \lneqq H^i_\sigma/(H^i_\sigma)_1$ is maximal. The result now follows from the correspondence between subgroups of $H^i_\sigma/(H^i_\sigma)_1$ and subgroups of H^i_σ containing $(H^i_\sigma)_1$. □

By equation (3.45) the product of the groups $\xi^i_{a_\sigma}(F^i_\epsilon)N^i_\sigma = \xi^i_{a_\sigma}(F^i_\epsilon) \ltimes N^i_\sigma$ is a semi-direct product, we may write:

$$\xi^i_{a_\sigma}(F^i_\epsilon) \ltimes \xi^i_{a_\sigma}(N^i_\epsilon) \overset{1}{\leq} \xi^i_{a_\sigma}(F^i_\epsilon) \ltimes N^i_\sigma \overset{2}{\leq} F^i_\sigma \ltimes N^i_\sigma \tag{3.46}$$

By proposition (3.13) one of the above inclusions must be an equality. Let us examine the meaning of each of the two cases.

equality in 1 This implies $\xi^i_{a_\sigma}(N^i_\epsilon) = N^i_\sigma$ in particular $\xi^i_{a_\sigma}(N^i_\epsilon) \lhd H^i_\sigma$ and therefore acts trivially on $B_{T^i}(\overline{\sigma}, 1)$ - the one ball around a lifting of σ to T^i.

equality in 2 This implies that the *covering* morphism: $l^{i,a_\sigma} : W^i_\epsilon \to W^i_\sigma$ induces an isomorphism on the fundamental groups, and is therefore an isomorphism of graphs. Observe that $(f^i)^{-1}(a_\sigma)$ is a product of a graph and an edge, for example $(f^2)^{-1}(a_\sigma) \cong W^2_\sigma \times (a_\sigma) \cong W^2_\epsilon \times (a_\sigma)$.

Equality in 1 or in 2 holds in any one of the four "sites": $i \in \{1, 2\}$ and $\sigma \in \{x, y\}$. We will show that the two cases in which 1 or 2 hold in all four sites correspond to the two cases in the statement of the theorem, then we will rule out all other 14 possibilities. We proceed in four steps.

3.3.1 step1

If equality in 1 holds for all four sites $\xi^i_{a_\sigma}(N^i_\epsilon) \lhd H^i_\sigma$ in all four sites. Then N^i_ϵ, being normal in H^i_x and in H^i_y, acts trivially on T^i. N^i_σ also acts trivially on T^i because of the equality $\xi^i_{a_\sigma}(N^i_\epsilon) = N^i_\sigma \ \forall \sigma \in \{x, y\}$. Finally the normal subgroup generated by all stabilizers $N \overset{\text{def}}{=} \langle N^i_\sigma : \sigma \in \{x, y\} \rangle$ acts trivially on T^i. This is true for both $i \in 1, 2$ so, after passing to the effective quotient, $\Gamma(X)$ is actually a complex of trivial groups and Γ - its fundamental group acts freely and discretely on Δ and is therefore torsion free. This situation corresponds to case (2) in the statement of the theorem.

3.3.2 step2

If equality in 2 holds for all four sites then

$$X = (f^2)^{-1}(X^2) \cong W^2_\epsilon \times (X^2) \cong (f^1)^{-1}(X^1) \cong X^1 \times W^1_\epsilon \cong X^1 \times X^2 \tag{3.47}$$

Thus X is a square and $\Gamma(X)$ - a square of groups. This situation corresponds to case (1) in the statement of the theorem.

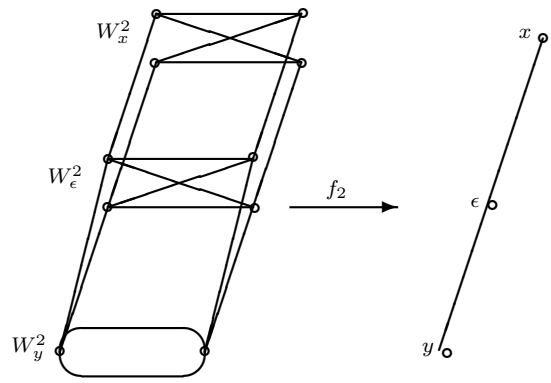

Figure 3: Illustration for step 4

3.3.3 step3

Assume first that equality in 2 holds in two sites of different sides. Without loss of generality these sites are ($i = 1; \sigma = x$ and $i = 2; \sigma = x$), so $(f^1)^{-1}(a_x) \cap (f^2)^{-1}(a_x)$ is a "quarter of a square". Since $(f^i)^{-1}(\epsilon)$ covers $(f^i)^{-1}(y)$ for $i \in \{1, 2\}$ X is necessarily a square, and we are back to the case of step2.

3.3.4 step4

Assume that equality in 2 holds for one site (say $i = 2, \sigma = x$). Then either we are back to the case of step2 or, by step3, equality in 1 holds for $i = 1; \sigma \in \{x, y\}$. In the later case, reasoning as in step1 we conclude that $N \triangleleft \Gamma$, the subgroup generated by all vertex stabilizers, acts trivially on T^1. The action morphism $\Gamma \to \operatorname{Aut} T^1$ then splits via the quotient $\Gamma \to \Gamma/N \cong \pi_1(X, \sigma_0) \to \operatorname{Aut}(T^1)$. Equality in 2 holds for $(i = 2; \sigma = x)$ so $(f^2)^{-1}(a_x) = W_\epsilon^2 \times a_x = W_x^2 \times a_x$. Furthermore $l^{2,a_y} : W_\epsilon^2 \to W_y^2$ is a covering morphism of graphs. The situation is drawn in figure (3). By the Seifert van Kampen theorem

$$\pi_1(X, \cdot) = \pi_1(W_x^2, \cdot) *_{\pi_1(W_\epsilon^2, \cdot)} \pi_1(W_y^2, \cdot) = \pi_1(W_y^2, \cdot) \tag{3.48}$$

And the action on T^1 is isomorphic to the action of $\pi_1(W_y^2, -)$ on the universal cover $\widetilde{W_y^2}$ of the graph of groups (notice that $(\widetilde{W_y^2}) \cong (\widetilde{H_y^2(W_y^2)}) \cong T^1$ because all vertex stabilizers act trivially on T^1). This action is discrete - contradicting the fact that Γ is irreducible, and proving the theorem. $\square$

References

[Bas93] Hyman Bass. Covering theory for graphs of groups. *Journal of Pure and Applied Algebra*, 89:3–47, 1993.

[BCN80] A.E. Brouwer, A.M. Cohen, and A. Neumaier. *Distance Regular Graphs*. Springer-Verlag, Berlin Heidelberg New York London Tokio, 1980.

[BK90] Hyman Bass and Ravi Kulkarni. Uniform tree lattices. *Journal of the AMS*, 3(4):843–902, 1990.

[BM00a] Marc Burger and Shahar Mozes. Groups acting on trees: from local to global structure. *Inst. Hautes Études Sci. Publ. Math.*, (92):113–150 (2001), 2000.

[BM00b] Mark Burger and Shahar Mozes. Lattices in product of trees. *Inst. Hautes Études Sci. Publ. Math.*, (92):151–194, 2000.

[BMZ] M. Burger, S. Mozes, and R.J. Zimmer. Linear representations and arithmeticity for lattices in $Aut(T_n) \times Aut(T_m)$. in preparation.

[DGS85] A. Delgado, D. Goldschmidt, and B. Stellmacher. *Groups and graphs: new results and methods*. Birkhäuser Verlag, Basel, 1985. With a preface by the authors and Bernd Fischer.

[Fan86a] Paul S. Fan. Amalgams of prime index. *J. Algebra*, 98(2):375–421, 1986.

[Fan86b] Paul S. Fan. The Thompson-Wielandt theorem. *Proceedings of The AMS*, 97(4), 1986.

[Gla97] Yair Glasner. Some remarks on the co-volume of lattices acting on a product of trees. Master's thesis, Hebrew University, Jerusalem 91904, Israel, 1997.

[Gol80] David M. Goldschmidt. Automorphisms of trivalent graphs. *Ann. of Math. (2)*, 111(2):377–406, 1980.

[Hae91] André Haefliger. Complexes of groups and orbihedra. In *Group theory from a geometrical viewpoint (Trieste, 1990)*, pages 504–540. World Sci. Publishing, River Edge, NJ, 1991.

[KM68] D. A. Každan and G. A. Margulis. A proof of Selberg's hypothesis. *Mat. Sb. (N.S.)*, 75 (117):163–168, 1968.

[Rag72] M. S. Raghunathan. *Discrete Subgroups of Lie Groups*. Springer-Verlag, Berlin Heidelberg New York, 1972.

[Ser80] Jean-Pierre Serre. *Trees*. Springer-Verlag, Berlin, 1980. Translated from the French by John Stillwell.

[SW79] Peter Scott and Terry Wall. Topological methods in group theory. In *Homological group theory (Proc. Sympos., Durham, 1977)*, pages 137–203. Cambridge Univ. Press, Cambridge, 1979.